Nooteboom EURO-38-02 | 2-AXLES | HYDR STEER / SUSP | 4.25 M EXTENSION

COMMON

ID	114510
Marca	Nooteboom
Construcción	Plataforma baja

PROPERTIES

Año de construcción	2004
Primera fecha de registro	27-07-2004
Peso vacío	12.880 kg
Peso de carge	25.120 kg
Maximo peso	38.000 kg
Longitud	1.747 cm
Anchura	252 cm



Nooteboom EURO-38-02 | 2-AXLES | HYDR STEER / SUSP |...

Referentienummer: 114510

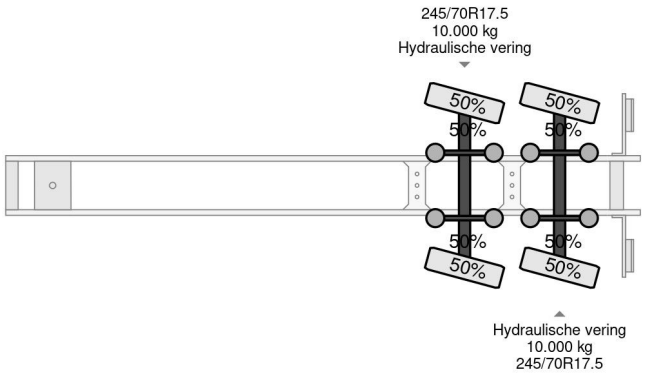

ACCESORIOS

DESCRIPCIÓN

For sale:

Make and model: Nooteboom EURO-38-02
First registration: 27-07-2004
VIN: XMREURO00040000420
Construction: Low bed trailer
GVW: 38.000 kg
Empty weight: 12.880 kg
Loading capacity: 25.120 kg

Dimensions:
Length: 13.22 m
Width: 2.52 m
Width extension: 3.00 m
Length extension: 4.25 m
Total length with extension: 17.47 m
Neck: 3.7 m
Bed: 6.5 m
Floor height over wheels: 9.05 m

Suspension | Weights | Tyres:

2nd Axle: Hydraulic | 10.000 kg | 245/70R17.5 50%

General specifications:
Hydraulic steering
Remote control steering
Central lubrication
4.25-meter Extension
Brand axles: BPW
Power pack for hydraulics
ABS
LED working lights
NATO connector
Extendable sides

Of course, we have more pictures and information available, and we are looking forward to helping you.

Worldwide delivery is possible!

For more information, please contact our sales department:

D.P.A. Weeversstraat 2, 8316 GG Marknesse
Tel.: +31 527 24 61 40
Email: info@hulleman.com